REVISIONS			
LTR	DESCRIPTION	DATE	APPVD
A	INITIAL RELEASE NUM: 70095-436		
B	(CL II) MODIFIED NOTE 4 ECN: 94891	V.JONES 6-11-04	
C	(CL II) SEE ENG CHG ECN: 98663-0000	E.PLACE 12-19-05	

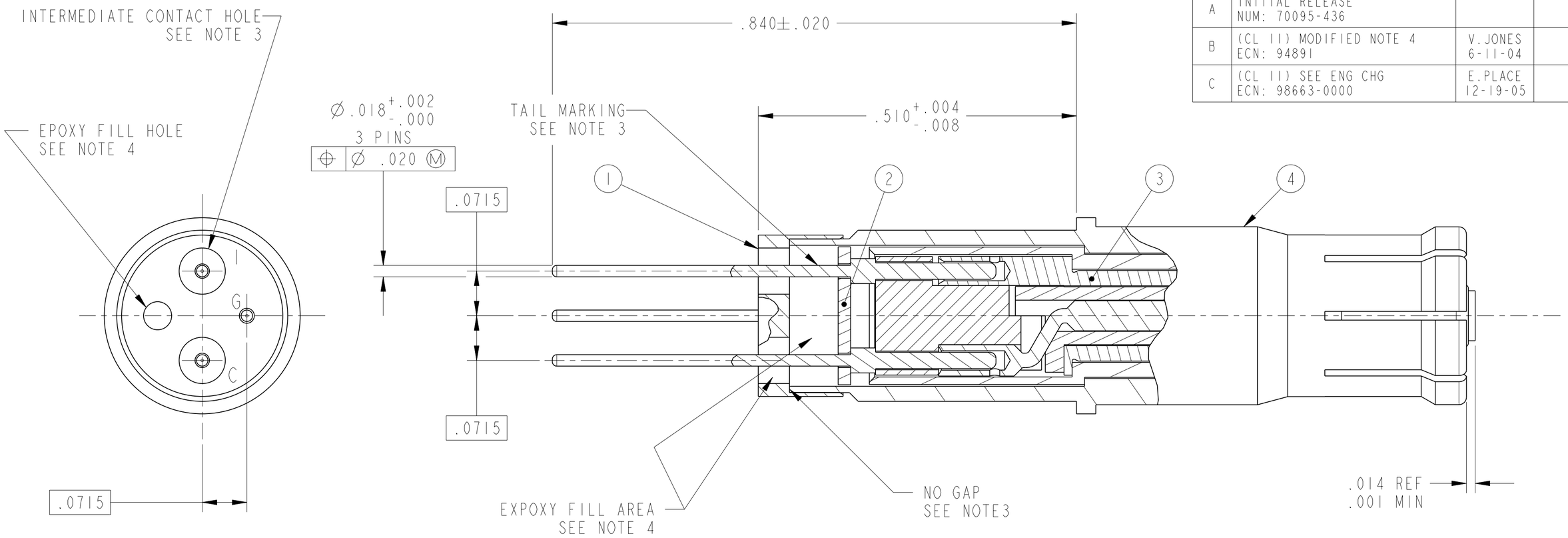

5. CLEANING OF PARTS IN CHLORINATED SOLVENTS IS NOT PERMISSIBLE.

4. FILL THE INDICATED AREA WITH EPOXY 9-4954-2 TO HOLD INNER COMPONENTS IN PLACE. PREHEAT CONTACT TO 150F PRIOR TO FILLING. EPOXY MAY ALSO BE PREHEATED TO 150F TO 250F PRIOR TO FILLING. NO EPOXY PERMITTED ABOVE OUTER SURFACE OF CAP ASSEMBLY. THE INDICATED HOLE IS PROVIDED FOR EPOXY FILL. CURE EPOXY AT 150°F FOR 4 HOURS MINIMUM FOLLOWED BY 250°F TO 275°F FOR 2 TO 4 HOURS.

3. PRESS FIT CAP ASSEMBLY ONTO REAR OF OUTER CONTACT AS SHOWN (NO GAP PERMISSIBLE WHERE INDICATED). THE INTERMEDIATE CONTACT TAIL (MARKED IN INDICATED AREA) MUST BE ASSEMBLED THROUGH THE INTERMEDIATE CONTACT HOLE OF THE CAP ASSEMBLY (INDICATED BY "I").

2. CAUTION: HANDLE ASSEMBLY CAREFULLY TO PREVENT MISALIGNMENT OF PIN CONTACT TAILS.

1. DRAWING ILLUSTRATES FINAL ASSEMBLY.

NOTES:

POS	QTY	PART NUMBER	DESCRIPTION	NOTE
4	1	21-033948-015	OUTER CONTACT ASY	
3	1	21-033370-075	INNER & INTERMED. CONTACT ASY	
2	1	21-033975-001	SEAL	
1	1	21-033966-055	CAP ASSEMBLY	

PARTS LIST

UNLESS OTHERWISE SPECIFIED

LINEAR DIMENSIONS ARE IN INCHES
TOLERANCES:
.XXXX = ±.0005
.XXX = ±.010
.XX = ±.03
.X = ±.1
ANGLES = ±2°
OTHER STANDARDS PER 9-3800 AND DOD-D-1000
THIRD ANGLE PROJECTION

SPECIFICATIONS

MATERIAL SPEC.: N/A

PROCESS SPEC.: 9-4954-2 SEE NOTE 4

APPROVALS		DATE
PREPARED	R.POTOCHEK	10-2-98
CHECKED	L.RATCHFORD	10-5-98
MATERIAL	J.TOKAROWSKI	10-5-98
APPROVED	L.RATCHFORD	10-5-98
APPROVED	L.RATCHFORD	10-5-98

PRO/ENG INFORMATION
21-033921-045.ASSEM
21-033921-045

AMPHENOL CORPORATION
SIDNEY, N.Y. 13838

CONTACT, SOCKET,
CONCENTRIC TWINAX,
SIZE 8 PCB STYLE TERMINATION

U

SIZE	FSCM NO.	DOCUMENT NO.	REV.
C	77820	21-33921-45	C

SCALE: 8.0 | REF: 21-33968-15 | SHEET 1 OF 1

FAMCODES | DATA3: | CICS:

THE USE OF THIS DOCUMENT IS UNLIMITED. HOWEVER, DOCUMENTS REFERENCED HEREON MAY CONTAIN LIMITED RIGHTS DATA.

STAMPING DATA				NEXT ASSEMBLY
COMPANY ID:	9	CODED/MS/CUST:	N	N/A
INTERNAL:	N	LOT NO:	N	
DATE CODE:	N	SEE DRAW:	N	N/A

SH 1 OF 1

DOC NO 21-33921-45

FORMAT: CUP REV: 22-JULY-92

IMAGED / Mar . 13 2006, 01:39 PM